Project Proposal

Title of the Project :

Microcontroller-Free Analog Obstacle Avoidance Robot Using IR Sensors and PWM Motor Control

Components Used

1. Analog IR Sensor Modules (2)
2. Operational Amplifiers (for Schmitt Trigger, Integrator, Summer, Comparator)
3. NPN Transistors (Motor Driver Switch) - 2SC5824(3A- Ic(max))/2N2222(800mA-Ic(max))
4. DC Geared BO Motors (4)
5. Motor Wheels-4
6. 7805 Voltage Regulator
7. Resistors-7k,28k,10k,1k(6),100k(2),100ohms
8. Capacitors-100nF
9. Flyback Diodes -In4007(2)
10. Lipo Battery - 3.7V(4)
11. Robot Chassis
12. Connecting Wires
13. Breadboard & Perforated Board

Circuit Diagram

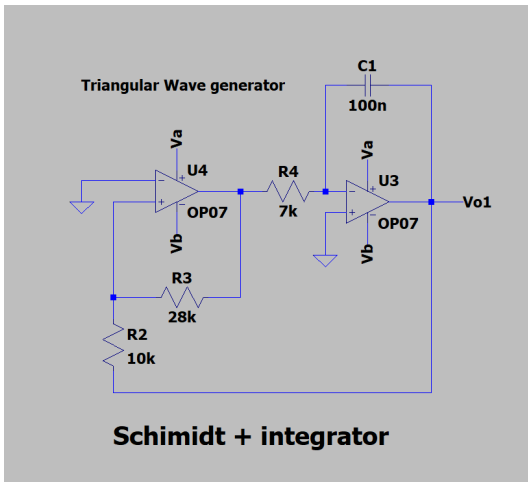

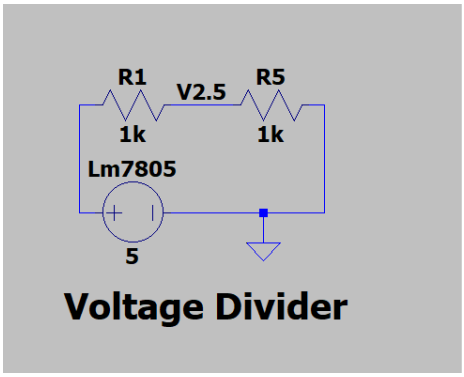

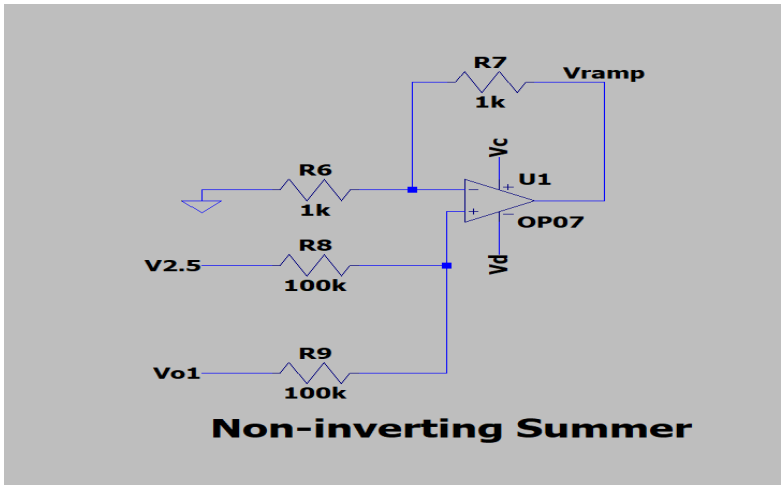

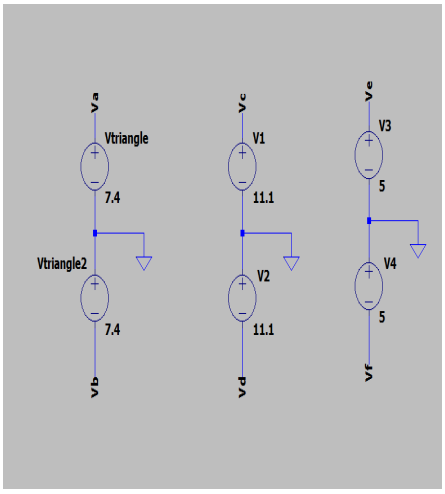

Power supplies

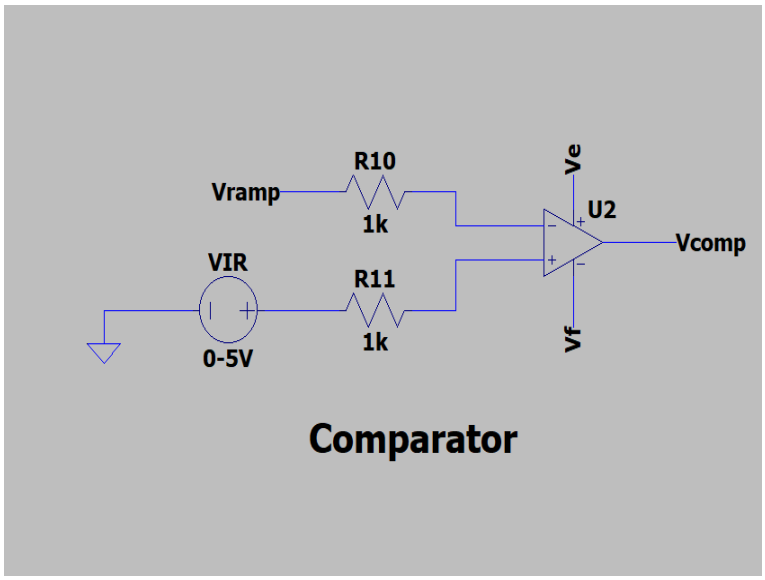

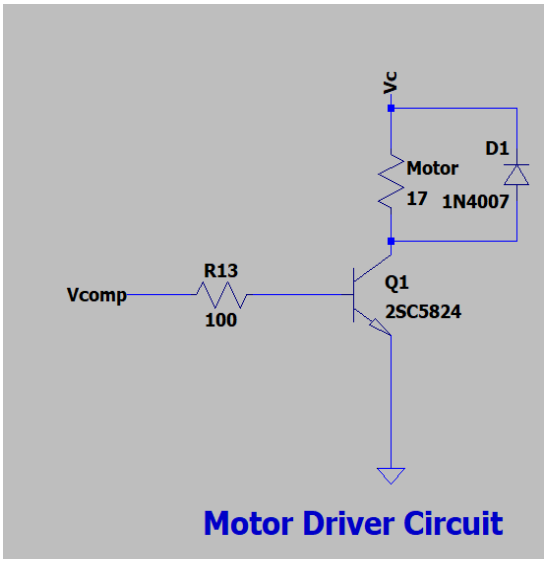

The circuit consists of the following main blocks:

1. **Schmitt Trigger + Integrator**
    - Used to generate a triangular waveform.
2. **Non-Inverting Summer**
    - Adds 2.5 V DC offset to the triangular wave.
3. **Comparator**
    - Compares the triangular waveform with the IR sensor output voltage.
    - Generates a PWM signal.
4. **Transistor Motor Driver**
    - Works as a switch to drive the DC motor using PWM.
5. **Power Supply Section**
    - 7805 voltage regulator provides stable 5 V supply.
6. **Voltage Divider**
    - Generates 2.5 V reference for the summer circuit.

Working Principle

This project implements an analog obstacle avoidance robot using IR sensors and PWM motor control.

A Schmitt trigger and integrator circuit are used to generate a 5 V peak-to-peak triangular waveform. This waveform is passed through a non-inverting summer, where a DC offset of 2.5 V is added using a voltage divider circuit.

The output of the summer is applied to a comparator, while the reference voltage is provided by the IR sensor. The comparator therefore generates a PWM signal whose duty cycle depends on the IR sensor voltage.

- If the IR sensor output is close to 0 V (object detected) → the comparator produces low duty cycle PWM.
- If the IR sensor output is close to 5 V (no obstacle) → the comparator produces high duty cycle PWM.

The PWM signal is applied to a transistor driver circuit, where the transistor operates as a switch to drive the DC motor. A flyback diode is connected across the motor to protect the transistor from back EMF generated by the motor during switching.

Two IR sensors are used in the robot:

- Left IR sensor controls the Right motor
- Right IR sensor controls the Left motor

This cross-control mechanism allows the robot to avoid obstacles.

Robot Behavior

- **Obstacle on left side**
    - Left IR detects object → low duty cycle to right motor
    - Left motor runs faster
    - Robot turns right
- **Obstacle on right side**
    - Right IR detects object → low duty cycle to left motor
    - Right motor runs faster
    - Robot turns left
- **Obstacle directly in front**
    - Both sensors detect obstacle but typically produce slightly different voltages
    - This creates different PWM duty cycles
    - Robot begins turning slightly
    - The turn makes one sensor closer to obstacle
    - This increases the duty cycle difference
    - Robot eventually turns away from the obstacle

Thus the robot continuously adjusts its direction and avoids obstacles autonomously.

Mechanical Design of the Robot :

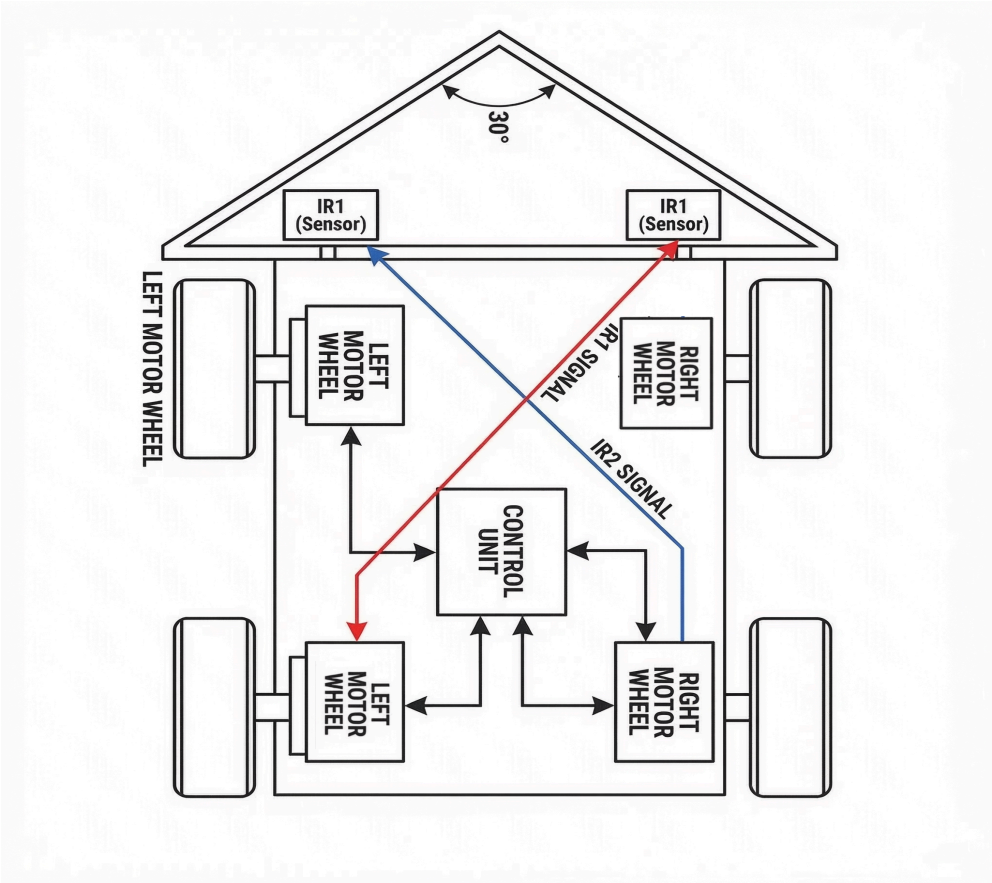

Simulation Results :

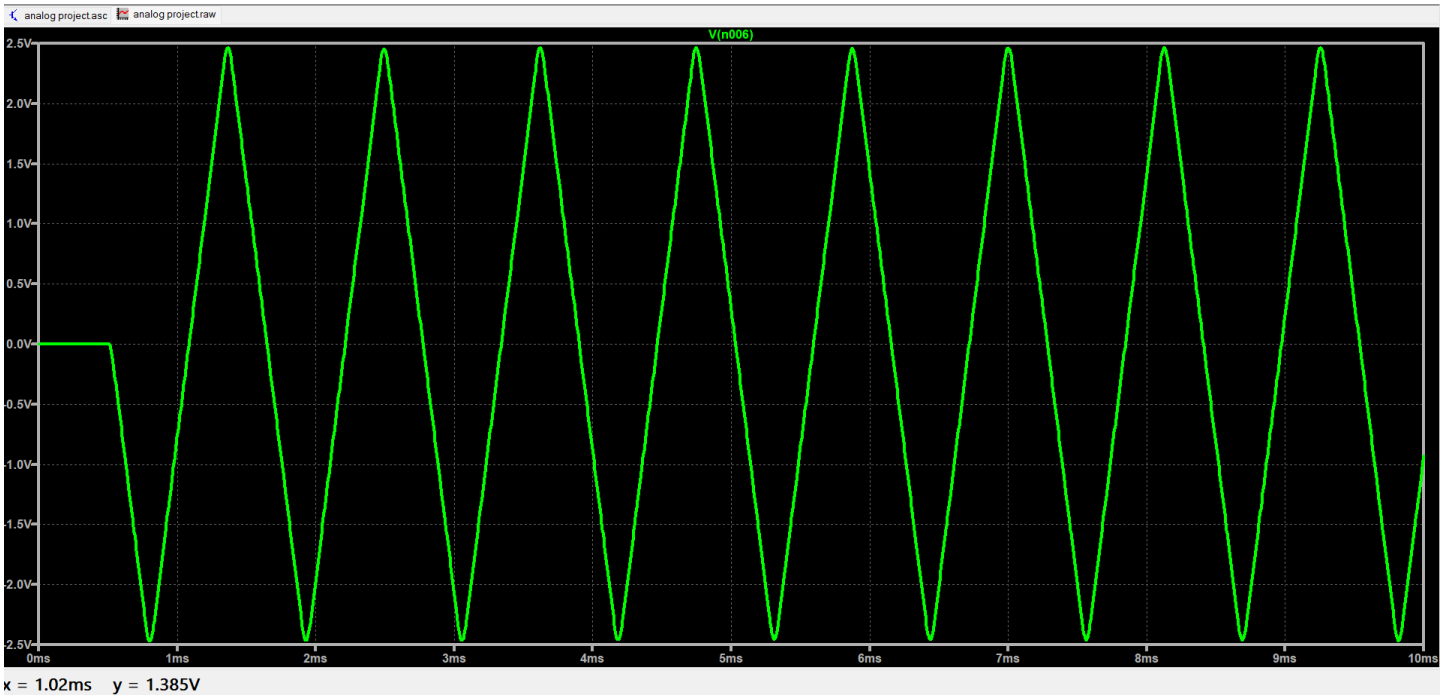

Schimidt + Integrator output

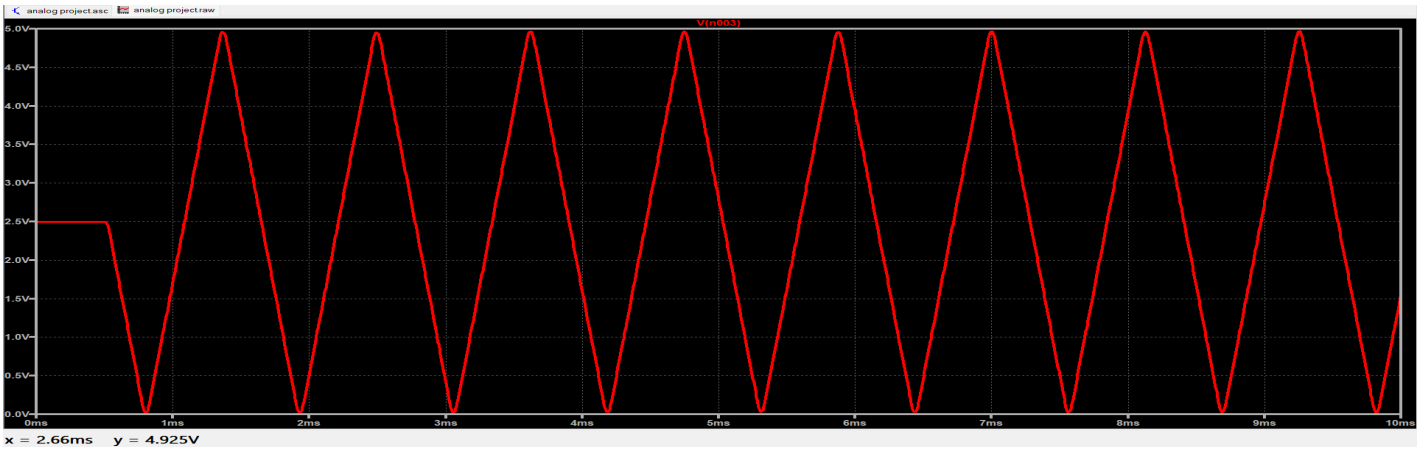

Summer Output

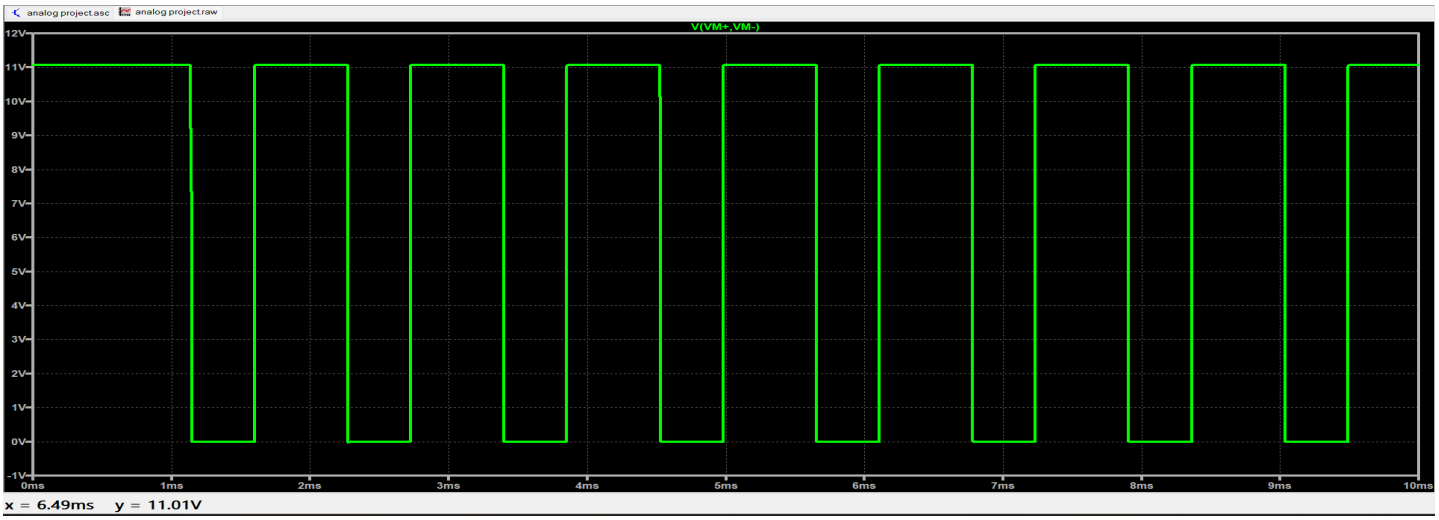

Driver Circuit (PWM Output)

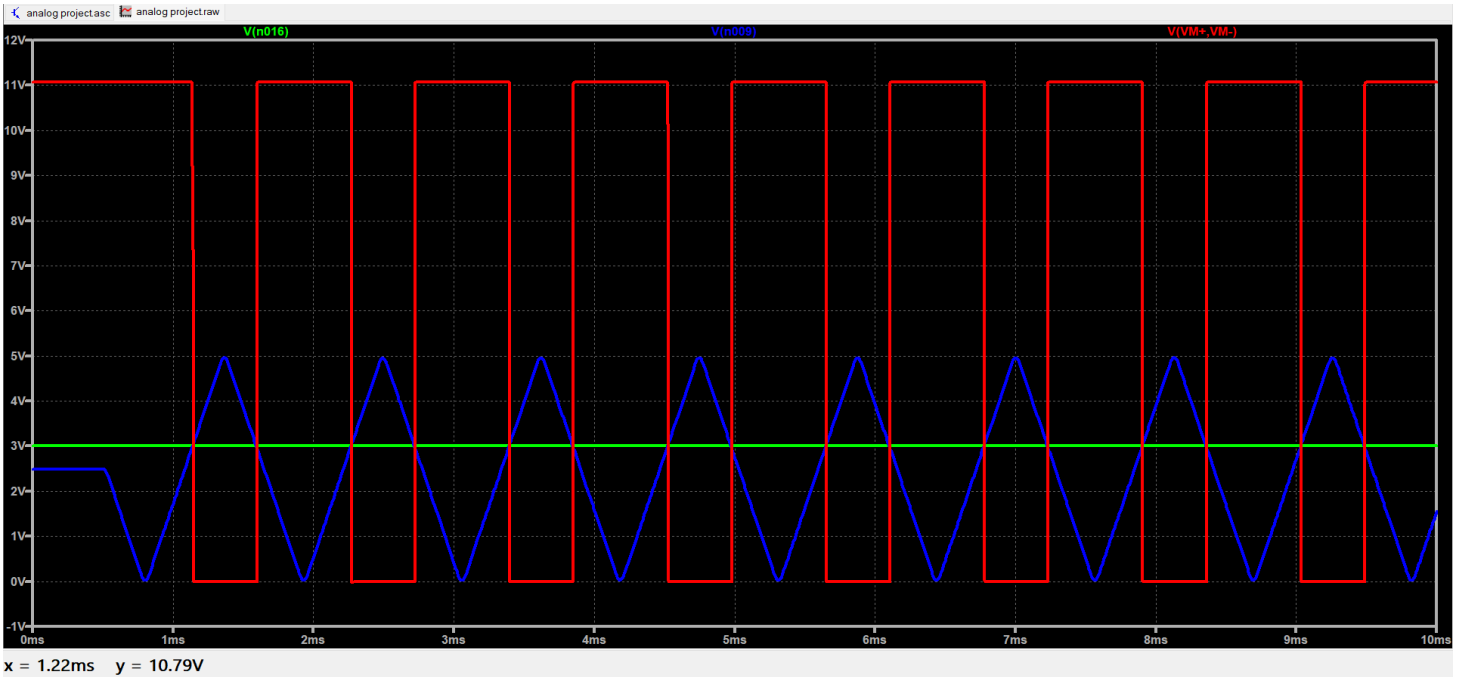

Practical Applications

1. Autonomous mobile robots
2. Industrial material transport robots
3. Intelligent vacuum cleaners
4. Warehouse automation robots
5. Educational robotics projects
6. Basic navigation systems in mobile robots

Conclusion

This project demonstrates an obstacle avoidance robot designed using purely analog circuits without a microcontroller. IR sensors detect obstacles and produce a voltage that controls the PWM duty cycle generated using a triangular wave and comparator circuit. The PWM signal drives the motors through transistor switches. By using cross control of sensors and motors, the robot automatically turns away from obstacles and navigates safely. This project shows that autonomous obstacle avoidance can be achieved using simple analog electronics and sensor feedback.

Team Members :

24JE0812 - Khushi Raj

24JE0813 - Killi Praveen Kumar

24JE0814 - Kodukulla Manogna